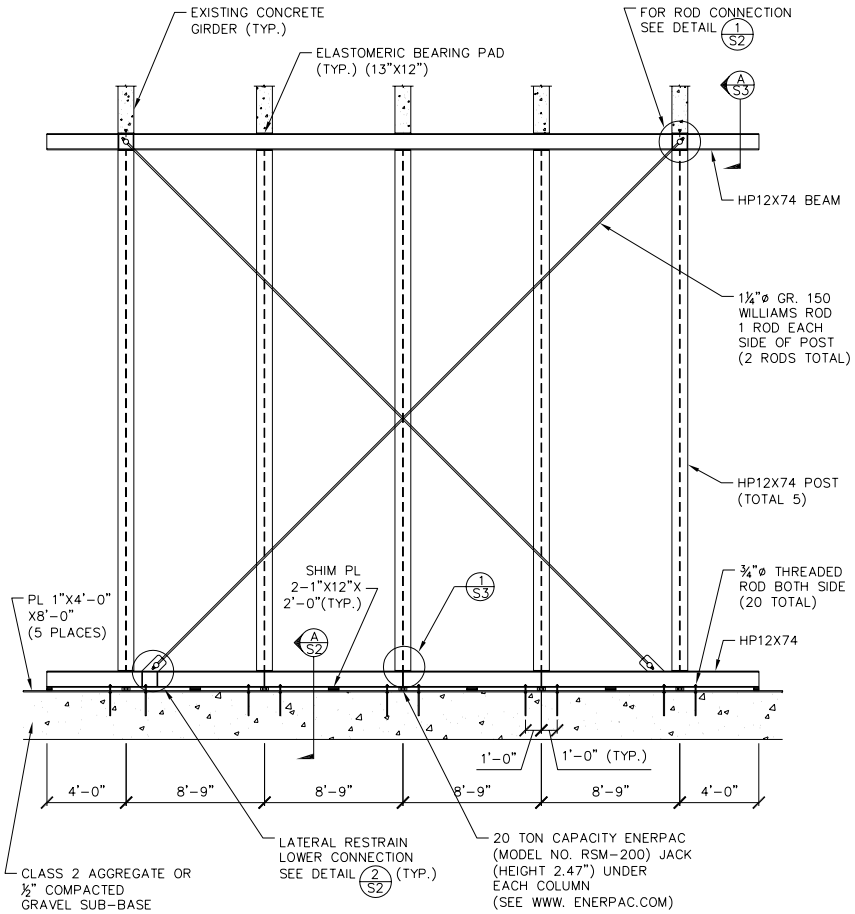

ELEVATION VIEW

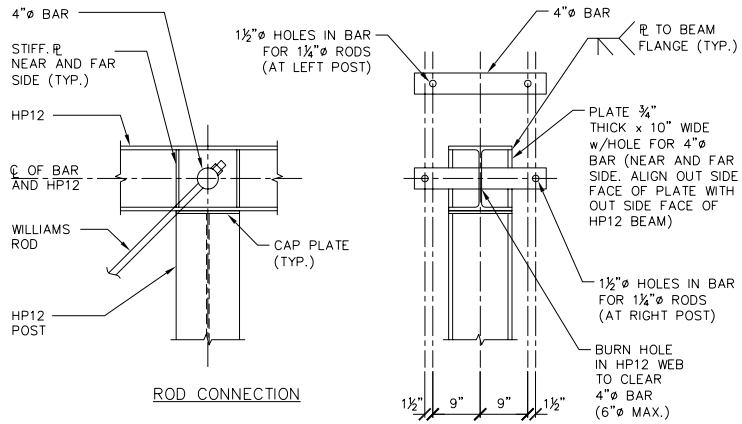

ROD CONNECTION

DETAIL 1/S2
Scale: 1"=1'-0"

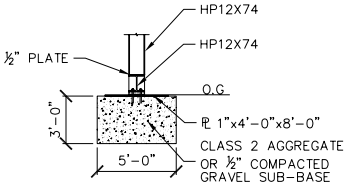

FOUNDATION CROSS-SECTION

SECTION A/S2

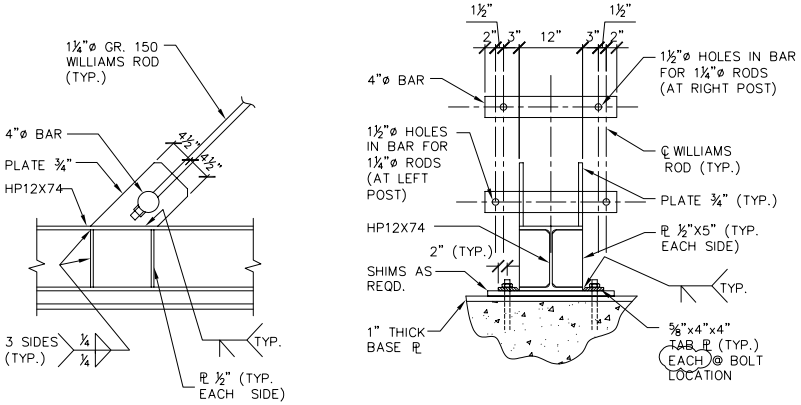

DETAIL 2/S2
Scale: 1"=1'-0"

FALSEWORK DETAILS – 1

RETROFIT AND CAPACITY IMPROVENT OF 13th STREET BRIDGE